1

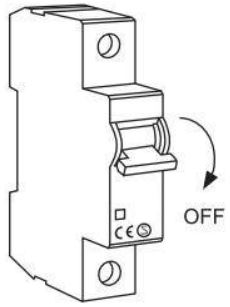

2

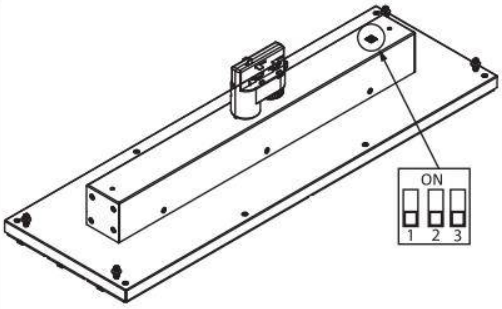

Before use, always checkdip switch settings

1	2	3	Power(W)
—	—	—	70
ON	—	—	64
ON	ON	—	57
ON	ON	ON	50

3

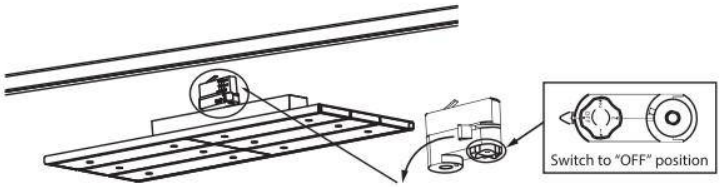

Fix this lever in this position
before putting the luminaire into the rail

4

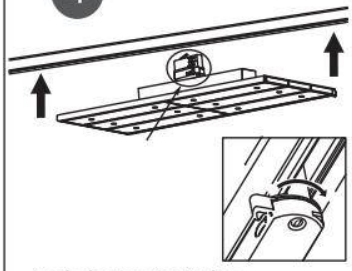

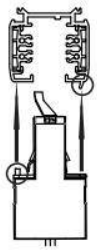

Lock the luminaire by
turning this lever

The adaptor flange
is in the same direction
with the track plane.

5

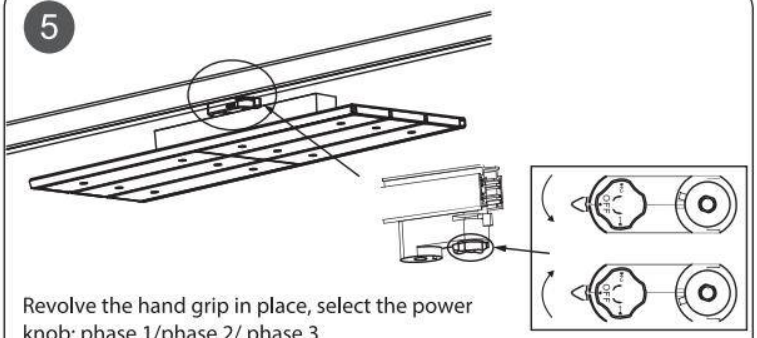

Revolve the hand grip in place, select the power
knob: phase 1/phase 2/ phase 3.
Can swing clockwise and anticlockwise.

Select phase "1","2"or "3"

6

350° Flexible

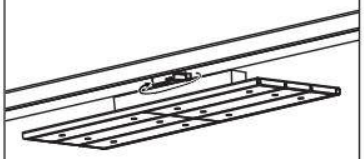
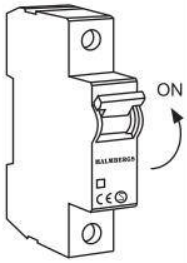
7